DT30

TSO & MIL Qualified Multi-Channel DC/AC Power Converter
(0-5 Vdc, 0-28 Vdc & 0-115 Vac Three-Channel Dimmer Unit)

External Wiring
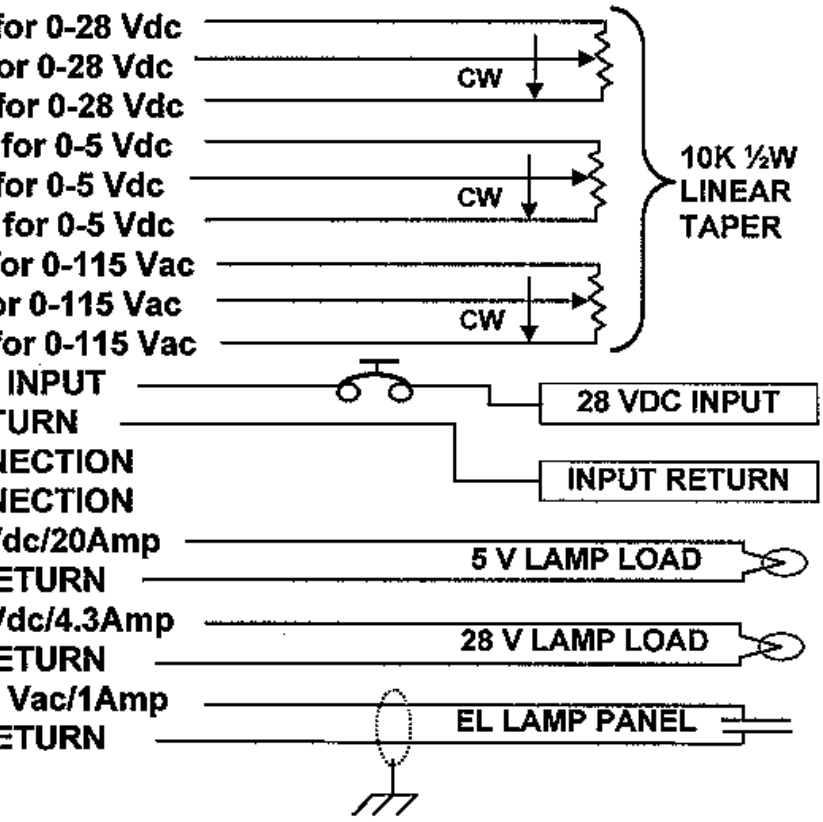
PIN #	PIN SIZE	DESCRIPTION
1, 2, 3	20 AWG	NO PIN, NO CONNECTION
4, 5, 6	20 AWG	CHASSIS GROUND
7	20 AWG	CONTROL RETURN for 0-28 Vdc
13	20 AWG	CONTROL SLIDER for 0-28 Vdc
15	20 AWG	CONTROL SOURCE for 0-28 Vdc
8	20 AWG	CONTROL RETURN for 0-5 Vdc
9	20 AWG	CONTROL SLIDER for 0-5 Vdc
17	20 AWG	CONTROL SOURCE for 0-5 Vdc
10	20 AWG	CONTROL RETURN for 0-115 Vac
11	20 AWG	CONTROL SLIDER for 0-115 Vac
12	20 AWG	CONTROL SOURCE for 0-115 Vac
14	12 AWG	28 VDC POWER INPUT
16	12 AWG	DC INPUT RETURN
18	12 AWG	NO PIN, NO CONNECTION
20	12 AWG	NO PIN, NO CONNECTION
22	12 AWG	CH1 OUTPUT, 0-5 Vdc/20Amp
24	12 AWG	CH1 OUTPUT RETURN
19	20 AWG	CH2 OUTPUT, 0-28 Vdc/4.3Amp
21	20 AWG	CH2 OUTPUT RETURN
23	20 AWG	CH3 OUTPUT, 0-115 Vac/1Amp
25	20 AWG	CH3 OUTPUT RETURN